blue connect
blue fit50

USER MANUAL

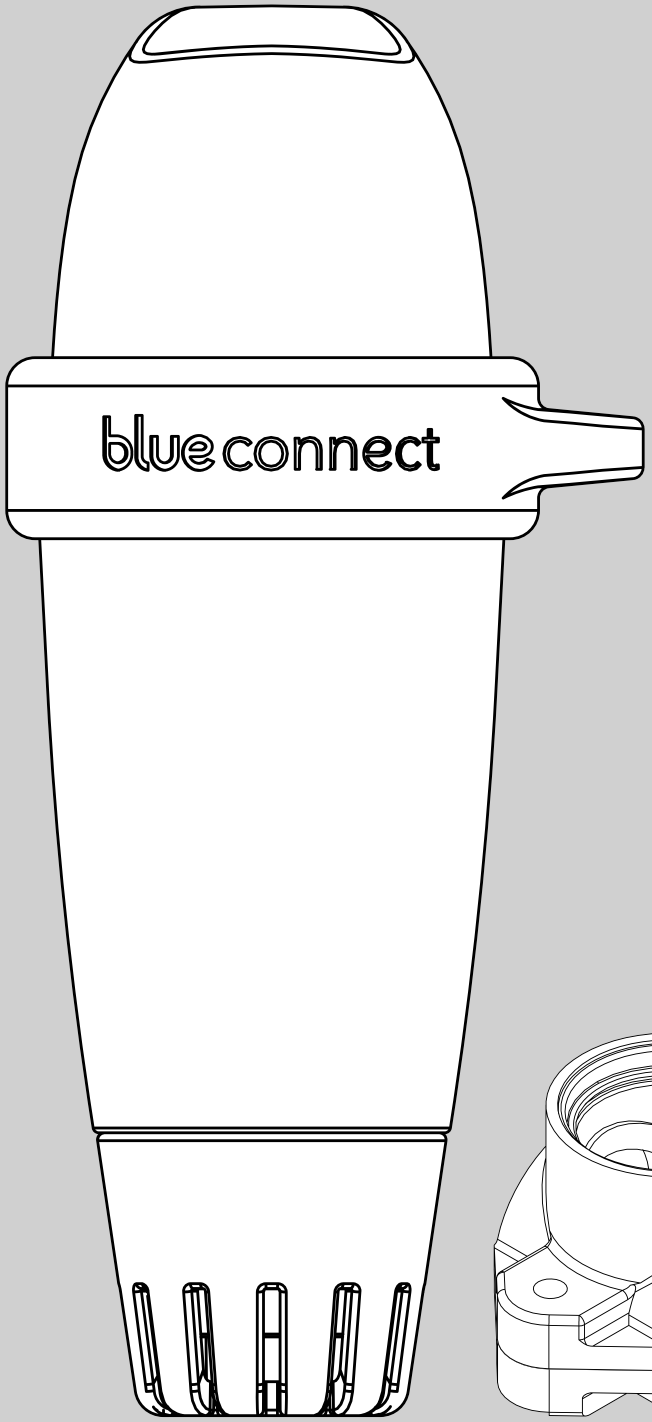

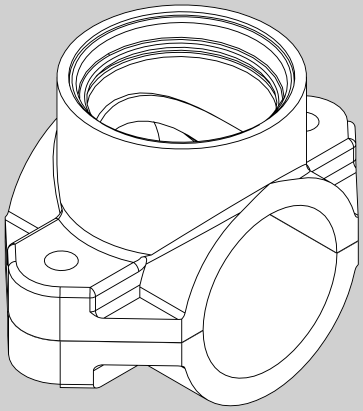

blue

Thanks for choosing **Blue Connect**.
www.blueconnect.io

Introduction

A. Overview

Blue Connect continuously measures the key parameters of your swimming pool (temperature, pH, chlorine, conductivity). It also informs you of the external temperature and weather based on your geolocation. The results of this analysis are then communicated to you via notifications on the "**Blue Connect**" app (available on smartphone and tablet, compatible with Android™ and iOS). If the device detects that one of the parameters is incorrect, an alert informs you of this status and provides you with the instructions to follow to regulate and stabilize this parameter in order to maintain a healthy and balanced water.

Blue Connect measures:

» Water temperature (°C, °F): An elevated temperature reduces the efficiency of the chlorine and promotes the development of microorganisms.
» pH (hydrogen potential): this quantity measures the acidic or basic character of a medium. pH contributes to the effectiveness of the disinfectant.
» ORP/REDOX (measurement of active chlorine in mV): the oxidation-reduction potential, or redox potential, measures the oxidizing or reducing power of one substance compared to another. It provides information on the disinfecting power of water.
» Conductivity[1] (µS): Measurement of the concentration of inorganic salts in the water by the ability of the latter to conduct electricity.

B. Precautions for use

» Do not use **Blue Connect** for anything other than water analysis.
» **Blue Connect** is not a toy. Avoid shocks as they may damage it.
» Keep **Blue Connect** out of reach of children when handling it (e.g. calibration and standby) due to the use of chemicals. Store calibration products out of reach of children.
» Do not open the top part of the device (except when replacing the battery). Follow carefully the battery replacement instructions. Damage caused by liquids is not covered by the warranty.
» Do not open the bottom part of the device containing the probe (except when replacing the probe). Follow carefully the probe replacement instructions. Damage caused by liquids is not covered by the warranty.
» Make sure not to leave the probe out of the water without the storage cap filled with KCl (saturated potassium chloride), pH4 or, as a last resort, pool water.
» Do not use demineralized water in the storage cap.
» Make sure the top part of the unit is out of the water to allow the communication system to work.
» Do not leave **Blue Connect** in water with a temperature below 5°C or above 50°C.
» Keep the **Blue Connect** serial number and key[2].
» Store **Blue Connect** sheltered from frost.

[1] For salt pools, salinity (more precisely the total salt content) is measured on the conductivity basis. Salinity (g/L) is used to evaluate the amount of salts in the water.
[2] On the back of the quick start guide and on **Blue Connect**'s storage cap.

Description of the equipement

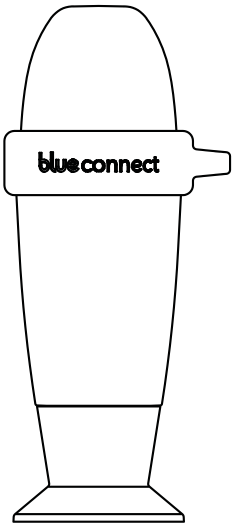

Blue Connect analyser: Delivered secured on the storage cap to protect the probe during transportation. The probe is immersed in KCI (saturated potassium chloride), which assures its protection.

The storage cap: Used to transport the probe out of the water or to keep the sensors immersed during an extended storage (in winter for example).

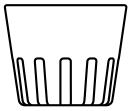

The usage cap: Must always be mounted on the device before placing it in water. It protects the sensors from any damage.

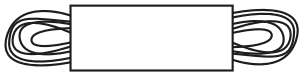

Cord: Allows to fix the device to a point of attachment.

Quick start guide: Helps you with the device start-up .

App installation

1. Activate the Internet (Wi-Fi or 4G) and Bluetooth® on your smartphone or tablet.
NB: Stay close to your device throughout the whole **Blue Connect** activation process.

2. Download the free "**Blue Connect**" app on App Store® and Google Play™.

AVAILABLE ON THE App Store

GET IT ON Google Play

3. Authorize notifications to benefit from the alerts.

4. Login to "**Blue Connect**":
» via Facebook®.
» via Twitter®.
» via your email address.

5. Create your swimming-pool: enter your swimming pool's characteristics.
NB: You can view or modify the characteristics of your swimming pool at any time in "Settings" » "Pool".

NB: To add a second swimming pool in the app, press the name of the active swimming pool and select "Add a pool".

The application is divided in four main sections[3]:

Dashboard: Informs you of **Blue Connect**'s status, the water temperature, the local weather and the quality of your pool water.

Table of values: Informs you precisely of the values measured by **Blue Connect**, trends and ideal values.

Maintenance guide: Advises you on the operations to perform to maintain the quality of the water in your pool.

Settings: Allows you to configure the settings for your pool and **Blue** devices, as well as have access to help and technical support.

[3] The app is subject to continual improvements and changes.

Blue Connect installation

A. How to start up Blue Connect?

1. In the app, in “Settings” » “**Blue Connect**”, press “Add” and insert the code (key) and the three last digits of the serial number (SN), which can both be found on the back of the start guide or on the storage cap of the device.

2. To start the device, you must activate it. The top of the device has a wave shape. Place the trough of the wave towards yourself and shake it sharply. You will hear two beeps, meaning that the initial activation was successful.

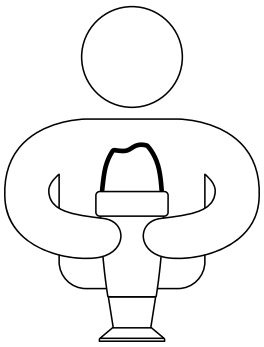

3. Press “ok” to finalize the activation process. The device is now linked to your account and permanently linked to Sigfox®[4] network.

4. Place **Blue Connect** upright on the storage cap and unscrew it.

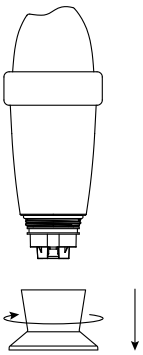

5. Empty the storage cap, rinse in clear water and store it.

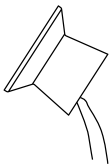

[4] Sigfox® is a telecommunications network specialised in the Internet of Things. It is a cellular network that does not interfere with domestic Wi-Fi. You can check if your swimming pool is covered by the Sigfox® network by visiting **www.sigfox.com/coverage**. **Blue Connect** uses Sigfox® to transfer data to your smartphone.

6. Rinse the probe in clear water and place the usage cap in the external part of the device to protect the probes.

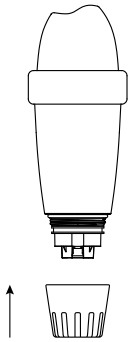

7. Place **Blue Connect** in the swimming pool:
In the **pool**: Leave it floating in the pool. If needed, you can secure by fixing it to a point of attachment with the cord and the rubber ring.
In the **technical room** with **Blue Fit50***: For further information, please check our website **www.blueconnect.io** or contact your reseller.

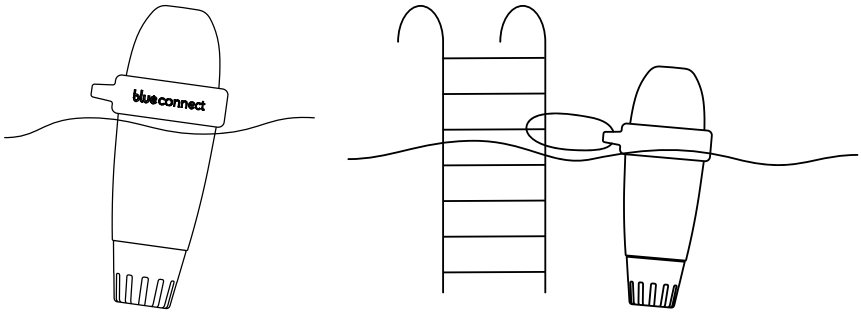

NB: Make sure the device is in vertical position and the top part out of the water to allow a correct communication.

B. Notes

» Do not leave the sensor exposed to air.
» The Sigfox® network connects automatically and sends measurements at regular intervals.
» The sensor may take a few hours to stabilise its parameters after its first immersion in the swimming pool.
» In case of non-existent Sigfox® coverage, there are two options:
  » **Blue Connect** operates in Bluetooth®. In such case, you must take daily Bluetooth® measurement(s) for the device to perform its analyser work.
  » **Blue Extender**** allows **Blue Connect** to connect to your Wi-Fi network. For further information, visit our website or contact your reseller.

Feel free to watch our **Blue Connect** start-up video available on **www.blueconnect.io** (help).

* **Blue Fit50** is a **Blue Connect** accessory. It is available in the **Blue Plus** pack, or sold separately.
** Sold separately.

Blue Connect maintenance

A. Calibration

NB: Calibration is not needed when receiving the device.

1. Take out the device from the water, pull out the usage cap and rinse the probe in clear water.

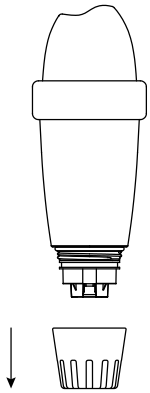

2. Rinse the storage cap with clear water and wipe it.

3. Activate the Internet (Wi-Fi or 4G) and Bluetooth® on your smartphone.
NB: Stay close to your device throughout the whole calibration process.

4. In the app, in "Settings" » "**Blue Connect**", press "Calibrate". A message at the top of the screen indicates that the device is detected.

5. Place a pH4 solution in the storage cap and screw it to the device. Then, press "Validate". At the top of the screen, you will see the progression of the measurement. Once the pH4 measurement is complete, unscrew the storage cap and rinse the probe. Empty, rinse[5] and wipe the cap.

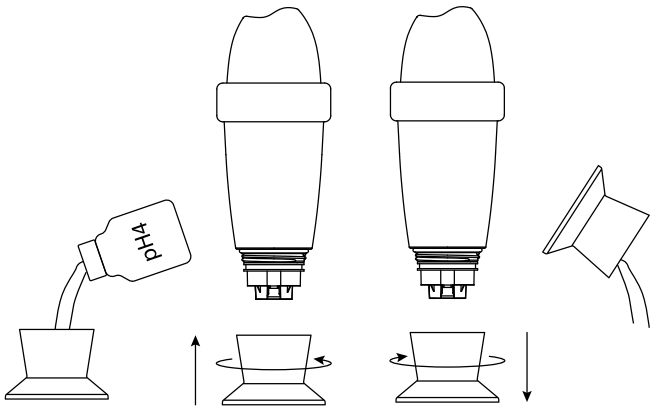

[5] Always clean the probe and storage cap with clear water after using a calibration product to avoid mixtures.

6. Place a pH7 solution in the storage cap and screw it to the device. Then, press “Validate”. At the top of the screen, you will see the progression of the measurement. Once the pH7 measurement is complete, unscrew the storage cap and rinse the probe. Empty, rinse and wipe the cap.

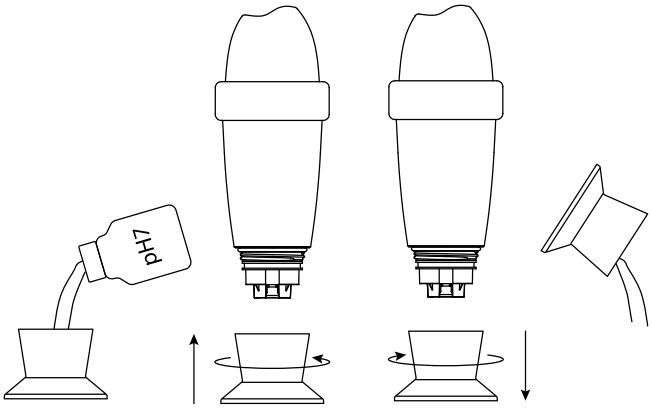

7. Validate calibration.

8. Place the usage cap and place back **Blue Connect** in the swimming-pool.

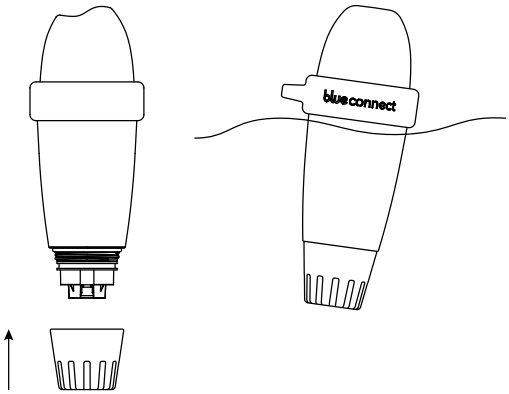

NB: Calibration products are for single use only. Never use them twice. Please contact your reseller to get new ones.

B. Battery replacement

The battery needs to be replaced approximately every two years. Please contact your reseller to get a new one.

NB: To ensure an optimized battery life, put **Blue Connect** into standby mode when the pool is in winterization.

The box includes:

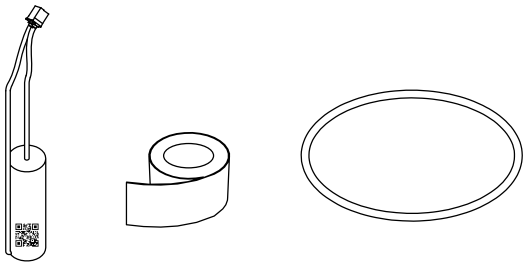

Installation:

1. In “Settings“ » “**Blue Connect**“, press “Battery replacement“.

2. Take out the device from the water, remove the rubber ring and the usage cap and place **Blue Connect** on the storage cap.

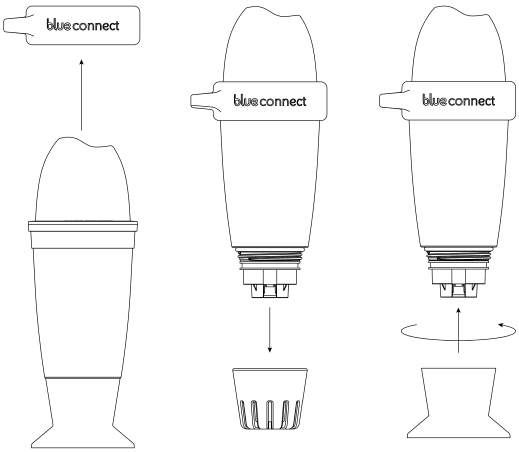

3. Wipe it and start the procedure in a dry and clean place.

4. Remove the adhesive tape and unscrew the upper part of the device. This is a left-hand thread. Unscrew it in a clockwise direction. Remove the seal and discard it.

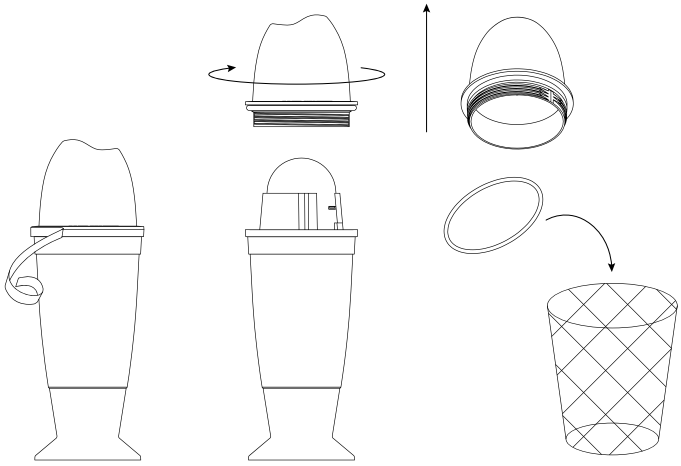

5. Unplug the white connector by pulling the red and black cable. The battery is at the other end of the cable. Press the plastic rod to release the battery, and remove it by pulling the cable.

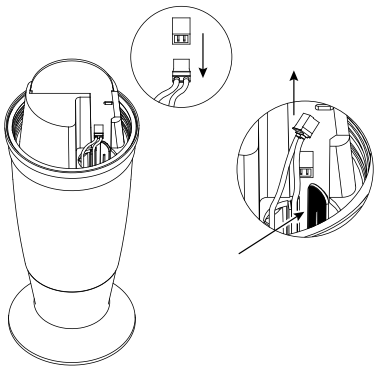

6. Place the battery at the bottom of the cavity until it is secure. Then, plug in the connector.

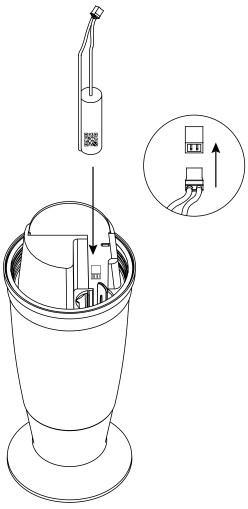

7. Place the new seal supplied with the battery on the screw thread of the upper part of the device. Close the upper part. This is a left-hand thread. Screw it counter-clockwise.

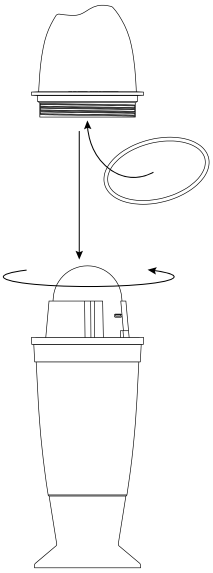

8. Paste the new adhesive tape supplied with the battery and replace the ring. Then, place the usage cap and place **Blue Connect** back in the water.

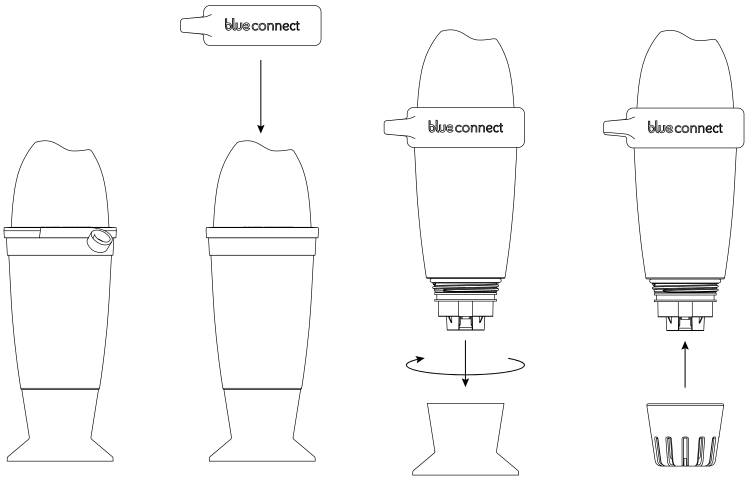

C. Probe replacement

The probe needs to be replaced approximately every two years[6]. Please contact your reseller to get a new one.

NB: To ensure maximum longevity of the probe, keep it for as long as possible in a humid environment. If you take the device out of the water, you must screw it to the storage cap with KCl (saturated potassium chloride), pH4 or, as a last resort, pool water.

The box includes:

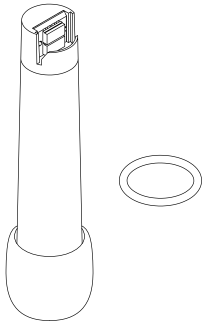

Installation:

1. In "Settings" » "**Blue Connect**", press "Probe replacement".

2. Take out **Blue Connect** from the water. Wipe the device and start the procedure in a dry, clean place.

3. Remove the usage cap and nut. If you struggle to unscrew the nut, use adjustable pliers by placing them on this exact spot (Image A).

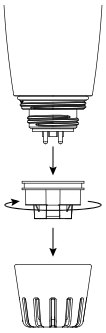

Image A:

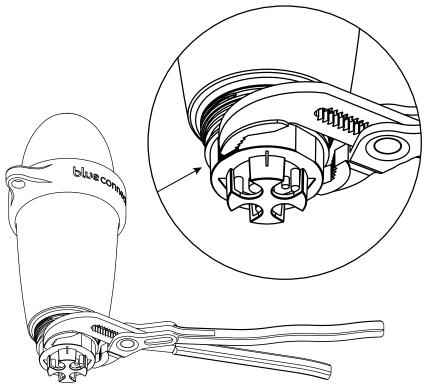

[6] Make sure not to leave the probe out of the water without the storage cap filled with KCl (saturated potassium chloride), pH4 or, as a last resort, pool water.

4. Slightly and gently pull on the four plastic tips of the probe. Be sure to remove the seal and discard it. It could be stuck inside.

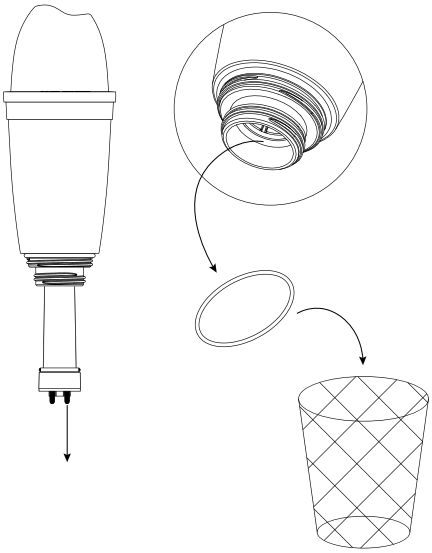

5. Scan the QR code of the new probe.

6. Remove the protective cap. Be careful not to drop the probe as it is a very fragile item. Place the new seal supplied with the replacement on the new probe. Insert the probe and turn it until it is placed correctly. Three beeps are emitted within 15 seconds.

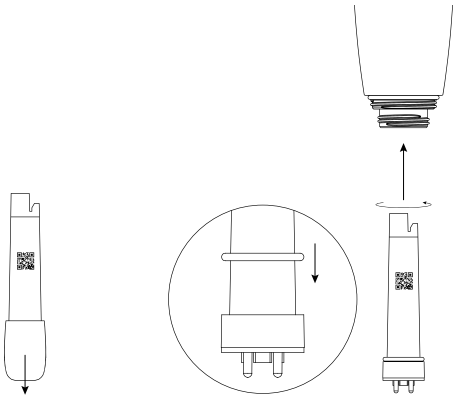

7. Screw the nut firmly onto the device. Feel free to use adjustable pliers to tighten it properly. Then, place the usage cap and place **Blue Connect** back in the water.

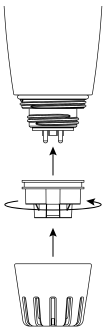

NB: The sensor may take a few hours to stabilise its parameters after its first immersion in the swimming pool.

D. Putting Blue Connect into standby mode for winterization/storage

Winterization:

1. Remove **Blue Connect** from the water. Remove the usage cap.

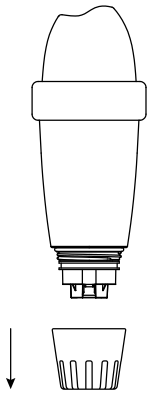

2. Activate the Internet (Wi-Fi or 4G) and Bluetooth® on your smartphone.
NB: Stay close to the device throughout the whole standby process.

3. In the app, in "Settings" » "**Blue Connect**", press on "Put into standby mode".

4. Rinse the storage cap with clean water and wipe it. Place KCl[7] (saturated potassium chloride) or pH4 in the storage cap and screw it.

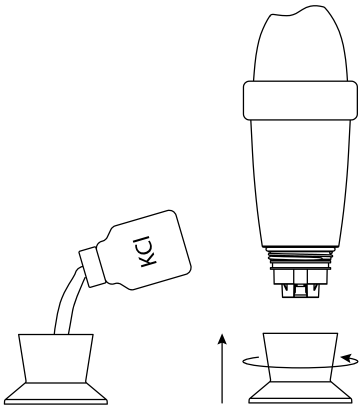

5. Validate the standby mode and store **Blue Connect** sheltered from frost.

[7] The KCl present in the storage cap can cause the formation of agglomerated salt at the junction with the body of the device, but this is not dangerous in any case. Simply rinse with clear water.

Storage:

If you need to take **Blue Connect** out of the pool for more than an hour, screw it on storage cap with KCl (saturated potassium chloride), pH4, or as a last resort, pool water as the probe should not be left dry.

D. Activating Blue Connect after winterization

1. In "Settings" » "**Blue Connect**", activate the device.
2. See "**Blue Connect** installation" from point 2.

Technical characteristics

» Dimensions: 253 mm x 96 mm
» Weight: 714 g
» Protection standard: IPx8 standard
» Sensors and measurements:
pH: Measurement range: 0 to 14
Accuracy: ± 0,1
Resolution: 0,1
Temperature (water): Measurement range: 5 to 50°C
Accuracy: ± 0,2°C
Resolution 0,1° C
Redox/ORP (active chlorine): Measurement range: 0 à 999 mV
Accuracy: ± 20mV
Resolution 1mV

Conductivity: Measurement range: 250 to 15.000 µS/cm
Accuracy: ± 10 %
Resolution 1uS/cm

» Connectivity: Sigfox®, Bluetooth Low Energy® (BLE)
» Power supply: 1 Lithium battery (thionyl chloride)
» Nominal voltage: 3,6 V
» Operating system: iOS, Android™ (4.0 Bluetooth®, Android™ 4.3 and iOS 9.0)
» Languages: English, French, Spanish, Dutch, German, Italian, Portuguese.
» Territorial compatibility: EU: 868 MHZ
US/AU: 902 / 920 MHZ

Troubleshooting guide

Compatibility problem between the serial number and the code.	Do not confuse B with 8 and vice versa.
No Sigfox® connection.	1. Check your Sigfox® coverage on **www.sigfox.com**. 2. Make sure the upper part of the device is out of the water to allow the communication system to operate. 3. Try placing the device somewhere else in the pool to find the location with the best connectivity. 4. Restart the device.
Problem to complete the installation.	Take a measurement Bluetooth®.
Problem with Bluetooth®.	1. Check the BLE 4.0. and Android 4.3 or iOS 9.3 compatibility. 2. Activate Bluetooth® on your smartphone or tablet. 3. Restart the device.
The measurements are not correct.	Check calibration of the device.

Feel free to check our online support website to benefit from a remote help: **www.blueconnect.io** (assistance).

blue fit50

Introduction

A. Overview

The **Blue Fit50** is a hose clamp compatible with **Blue Connect**. It allows to install **Blue Connect** in the technical room.

Note: **Blue Fit50** is a **Blue Connect** accessory. It is available in the **Blue Plus** pack, or sold separately.

B. The box includes

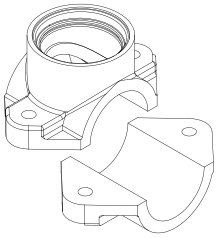

One hose clamp.

One cap.

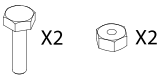

2 bolts.

C. Precautions for use

» Do not leave the **Blue Connect** on the **Blue Fit50** when there is no water in the pipes.
» If handling on the hydraulic circuit (risk of water hammer), it is advisable to remove the **Blue Connect** in order not to damage the product.
» Make sure to create a sufficient flow in your installation so that the **Blue Connect** can take measures.
» Always place the **Blue Connect** vertically with the probe downwards.

Blue Fit50 installation

NB: Feel free to ask your pool specialist for advice in case of any doubt.

A. Find the correct location

Make sure to always place the **Blue Fit50** after the filter (to avoid damaging the probes) and before your product injection system or electrolysis (to avoid altering the measures taken by the **Blue Connect**).

B. Set up

1. Turn off the filtration system.

2. With a 40mm diameter hole saw, drill a hole in the upper part of the pipe.
Note: The **Blue Connect** must be in vertical position, with the probe downwards.

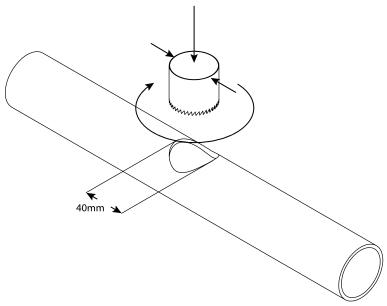

3. Place both parts of the hose clamp on each side of the pipe so that the holes coincide, and screw the hose clamp.

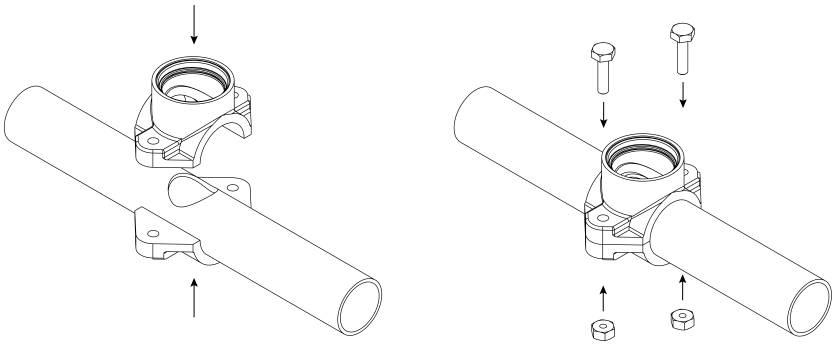

4. Screw the **Blue Connect**.

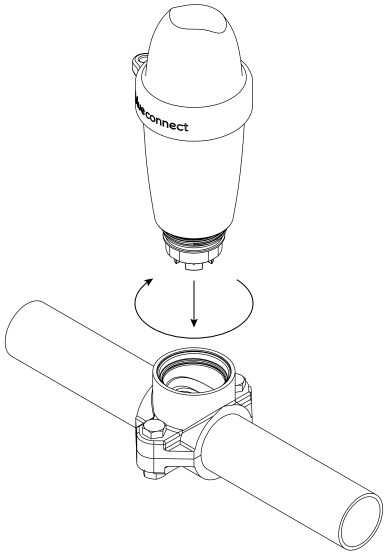

5. Turn on the filtration system.

6. Slightly and slowly unscrew the **Blue Connect** (maximum ½ turn) to remove any air. As soon as the water comes out, it means that there is no air left in the pipes, and you can then tightly screw **Blue Connect** again.

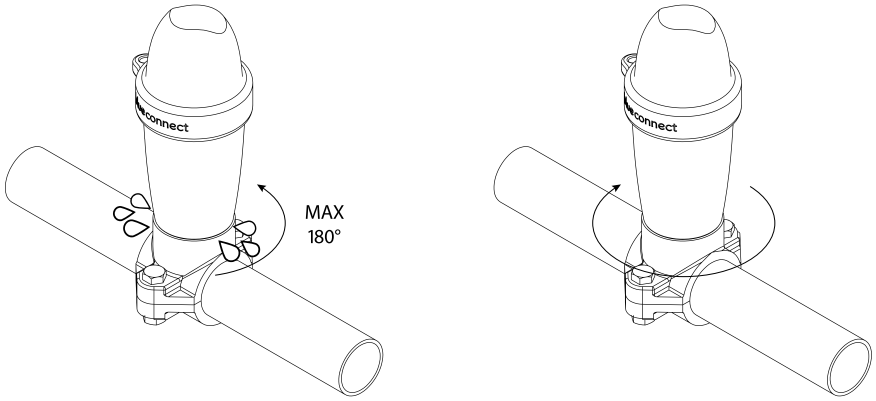

7. In "Settings" » "**Blue Connect**", activate the **Blue Fit50** option.

Winterization procedure

1. Unscrew the **Blue Connect**.

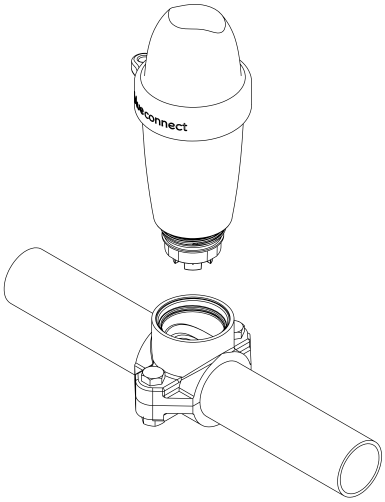

2. Seal the hose clamp with the cap provided in the **Blue Fit50** box.

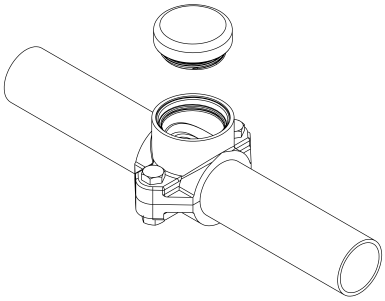

3. Activate the Internet (Wi-Fi or 4G) and Bluetooth® on your smartphone.
Note: Stay close to the device throughout the whole standby mode process.

4. In the app, in “Settings“ » “**Blue Connect**“ press “Put into standby mode“.

5. Rinse the storage cap and wipe it. Add KCl[8] (saturated potassium chloride) or pH4 in the storage cap and screw it.

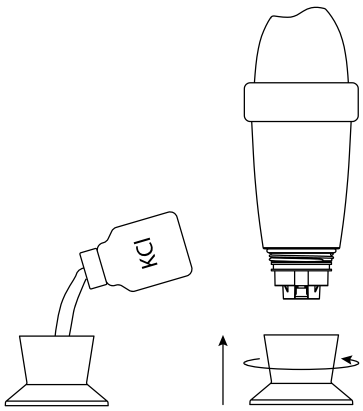

6. Validate the standby mode and store **Blue Connect** sheltered from frost.

Feel free to check our online support website to benefit from a remote help: **www.blueconnect.io** (assistance).

General information

Warranties

» Product + probes warranty: 24 months.
» Battery warranty: 12 months.

Riiot Labs does not offer any warranty against the deterioration of the material following a manipulation of this latter, in particular the replacement of probe and battery, nor against the damages following the drying of the probes, nor against the wear and normal aging of the product, nor against the damages caused by an accident or a misuse. Riiot Labs does not offer any warranty in case of nonobservance of the precautions for use.

How to recycle this product

This symbol indicates that this product must be disposed of in accordance with applicable legal requirements and separated from domestic waste. At the end of the product’s life span, please take it to an official collection point. Sorting and recycling your product help protect the stocks of raw materials and guarantee that all guidelines relative to health and environment protection are respected as part of the recycling.

[8] The KCl present in the storage cap can cause the formation of agglomerated salt at the junction with the body of the device, but this is not dangerous in any case. Simply rinse with clear water.

Registered trademark

Riiot Labs, **Blue Connect** and **Blue Fit50**, as well as their respective logos, may be trademarks or registered trademarks of Riiot Labs S.A.

Fluidra as well as their logos are trademarks or registered trademarks of Fluidra S.A.

The Bluetooth® brand (and its logo) is a registered trademark and is the property of Bluetooth SIG, Inc. and its use by **Blue Connect** is subject to license.

App Store is an Apple, Inc. service brand registered in the United States and other countries.

iOS is a trademark or registered trademark of Cisco in the United States and other countries, used under license.

Google Play and Android are Google Inc. brands.

All other trademarks and registered trademarks mentioned in this document are copyrighted and are the property of their respective owners.

Declaration of conformity

To obtain a copy of the FCC, CE declaration of conformity, visit our website **www.blueconnect.io/legal**.

For further information, please check our website **www.blueconnect.io** (assistance).

Declaration of conformity FCC

Changes or modifications not expressly approved by Riiot Labs SA could void the user's authority to operate the equipment.

For devices with the references :
5404014411121
5404014411145
5404014411220
5404014411240

FCC Part 15 compliance statement

This device complies with part 15 of the FCC Rules. Operation is subject to the following two conditions: (1) This device may not cause harmful interference, and (2) this device must accept any interference received, including interference that may cause undesired operation. NOTE: This equipment has been tested and found to comply with the limits for a Class B digital device, pursuant to part 15 of the FCC Rules. These limits are designed to provide reasonable protection against harmful interference in a residential installation. This equipment generates uses and can radiate radio frequency energy and, if not installed and used in accordance with the instruction, may cause harmful interference to radio communications. However, there is no guarantee that interference will not occur in a particular installation. If this equipment does cause harmful interference to radio or television reception which can be determined by turning the equipment off and on, the user is encouraged to try to correct interference by one or more of the following measures: - Reorient or relocate the receiving antenna. - Increase the separation between the equipment and receiver. - Connect the equipment into an outlet on circuit different from that to which the receiver is connected. - Consult the dealer or an experienced radio/TV technician for help.

Industry Canada Licence-Exempt Radio Apparatus

This device complies with Industry Canada licence-exempt RSS standard(s). Operation is subject to the following two conditions: (1) this device may not cause interference, and (2) this device must accept any interference, including interference that may cause undesired operation of the device.

Le présent appareil est conforme aux CNR d'Industrie Canada applicables aux appareils radio exempts de licence. L'exploitation est autorisée aux deux conditions suivantes : (1) l'appareil ne doit pas produire de brouillage, et (2) l'utilisateur de l'appareil doit accepter tout brouillage radioélectrique subi, même si le brouillage est susceptible d'en compromettre le fonctionnement.

Radio Frequency (RF) Exposure Compliance of Radiocommunication Apparatus

To satisfy FCC and IC RF Exposure requirements for mobile devices, a separation distance of 20 cm or more should be maintained between the antenna of this device and persons during operation. To ensure compliance, operation at closer than this distance is not recommended. This transmitter must not be co-located or operating in conjunction with any other antenna or transmitter.

Conformité à l'exposition aux champs RF des équipements radio

Pour satisfaire aux exigences FCC et IC concernant l'exposition aux champs RF pour les appareils mobile, une distance de séparation de 20 cm ou plus doit être maintenu entre l'antenne de ce dispositif et les personnes pendant le fonctionnement. Pour assurer la conformité, il est déconseillé d'utiliser cet équipement à une distance inférieure.
Cet émetteur ne doit pas être co- situé ou fonctionner conjointement avec une autre antenne ou un autre émetteur.

Declaration of conformity CE

CE

For devices with the references :
5404014411114
5404014411138
5404014411213
5404014411233

Hereby, Riiot Labs S.A. declares that the radio equipment type Blue Connect Smart Pool Analyser is in compliance with Directive 2014/53/EU. The full text of the EU declaration of conformity is available at the following internet address: **www.blueconnect.io/legal**

SIGFOX : Tx : 868.13MHz / 14dBm max Rx : 869.525MHz
Bluetooth LE : 2400-2483.5MHz / 10dBm max

Authorized countries codes:
ALB – AND – AUT – BEL– BIH – BLR – BUL – CYP – CZE – DNK – EST – FIN – GRC – HNG – HOL – HRV – IRL – ISL – LIE – LTU – LUX – LVA – MDA – MKD – MLT – MNE – NOR – POL – POR – ROU – SRB – SUI – SVK – SVN – TUR